2429025 - 1044B20 fuel filter filtering element - replace

Removing (Refitting)

Proceed with removal - 1044B10 fuel filter assembly - r + r or replace .

1. Position the tool (1a) in the vice with the splining (1b) by the shoes (1c), then close the vice.

	Name	Country
1a	Ring nut with support	1.871.000.100

2. Fit the fuel filter body (2a) in the tool positioned previously so that the bleed screw for the filter body (2b) is in the splining (2c) on the tool and the reference (2d) is aligned with the splining (2e) on the filter body.

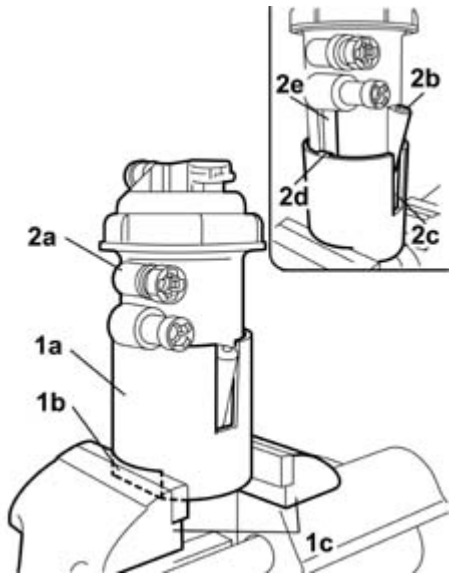

1. Position the spanner (1a) which is part of the filter body support tool, aligning the slots (1b) with the ribs (1c) on the ring nut (1d) for the fuel filter body.

	Name	Country
1a	Ring nut with support	1.871.000.100

2. Fit a regular spanner (2a) in the special housing (2b) in the spanner, then loosen the ring nut undoing it in an anti-clockwise direction.

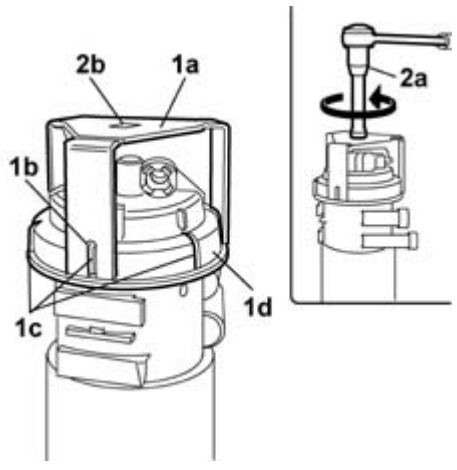

1. Remove the ring nut (1a), the filter cover-filter element assembly (1b) and the gasket (1c) between the cover and the filter body.

Drain the fuel remaining inside the filter body.

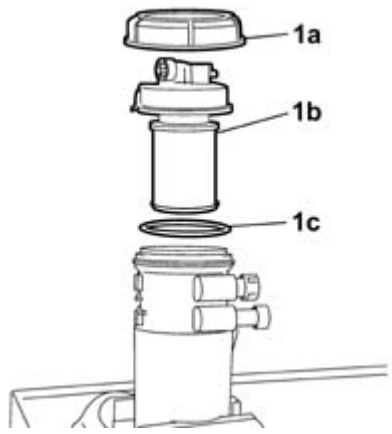

1. Rotate the filter cartridge (1a) through about 50 in a clockwise direction until it is in the end of travel position; in this position the cartridge to be replaced is completely free and can be separated from the cover (1b).

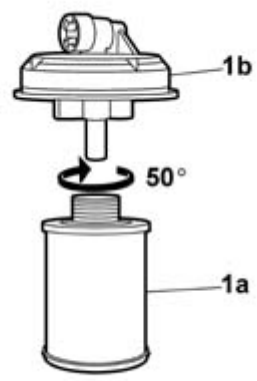

Refitting (Removing)

1. Take the new gasket (1a) from the replacement kit then, after having lubricated it, place it in the special housing in the fuel filter body (1b).

The filter cartridge must be kept in the protective plastic casing during the replacement procedure. The outer surface of the cartridge is its clean side and should not be polluted under any circumstances.

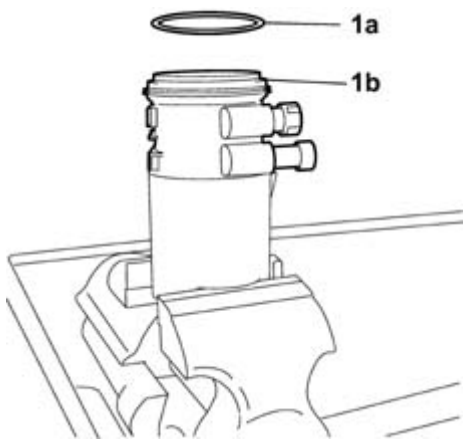

1. Open the protective plastic casing cover (1a), taking care not to touch the filter element (1b) inside with your hands, then proceed as described below.

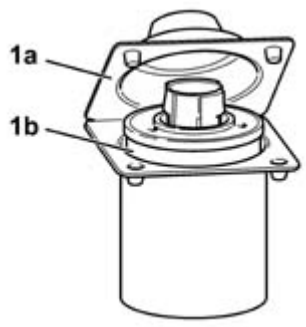

1. The filter cartridge should be assembled aligning the arrows (1a) on the filter cover (1b) with the references (1c) on the end of the filter element (1d).

2. Exerting slight pressure, rotate the filter cartridge 50 in an anti-clockwise direction until a 'CLACK' is heard (when it reaches the end of travel position).

3. Remove the protective plastic casing for the filter element.

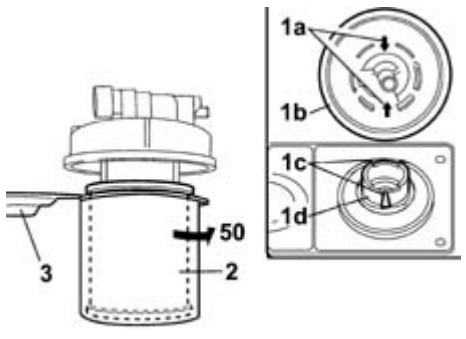

1. Position the filter cover (1a) on the filter body (1b) aligning the references (1c) on the cover and on the body.
2. Position the ring nut, tighten the thread and rotate it manually in a clockwise direction.

For the assembly to be correct, the references on the filter cover and the fuel filter body must be aligned otherwise the assembly cannot be fitted in the vehicle as there is only one fitting position.

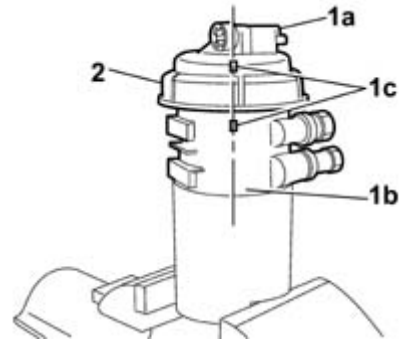

Position the spanner on the ring nut keeping the filter body in the vice and tighten the fuel filter cover retaining ring nut to the recommended torque.

	Fastening	Component	Ø	Value (daNm)
-	Ring nut	FUEL FILTER	-	3

	Name	Country
-	Ring nut with support	1.871.000.100

Proceed with refitting - 1044B10 fuel filter assembly - r + r or replace .

Let the engine run and check carefully that the fuel filter is not leaking which would confirm that all the assembly operations have been carried out correctly.